I N F O

INSTALLATION AND USER INSTRUCTIONS

DISHWASHER ESF 640

Electrolux

822 3037-02

CONTENTS

GB

1.	Read this first!	3
2.	Installation	4
3.	Using the machine for the first time	7
4.	Programme selection guide	13
5.	Useful tips	15
6.	Care and maintenance	17
7.	Safety	19
8.	Simple faults	22
9.	Service and spare parts	24
10.	Technical data	25

IMPORTANT INFORMATION

YOU MUST READ THE WHOLE OF THIS INSTRUCTION BOOK BEFORE YOU USE THE APPLIANCE. FOLLOW THE ADVICE CAREFULLY.

KEEP THE BOOK FOR FUTURE REFERENCE. IF YOU SELL OR GIVE AWAY THE APPLIANCE, MAKE SURE THAT THE BOOK IS PASSED TO THE NEXT OWNER.

Warnings

THE FOLLOWING WARNINGS ARE PROVIDED IN THE INTEREST OF OVERALL SAFETY. YOU MUST READ THEM BEFORE THE APPLIANCE IS INSTALLED OR USED.

Installation

- This appliance is heavy. Care should be taken when moving it.
- Any plumbing required to install this appliance should be carried out by a qualified plumber or competent person.
- Any electrical work required to install this appliance should be carried out by a qualified electrician or competent person.
- Make sure that the appliance does not stand on its electrical supply cable.
- Built-in appliances must be secured to the kitchen cabinetry as indicated in the installation instructions. Failure to do this may result in an unstable appliance which may cause damage or injury.

Usage

- Always unplug the appliance and turn off the water after use.
- Wash normal household utensils only.
- Do not wash items contaminated by petrol, paint, steel/iron debris or corrosive/acidic/alkaline chemicals.
- Do not wash cutlery with wooden/horn handles or glued parts, bronze cutlery, aluminium ware, crystal ware, leaded glass, antique/fine china.
- Wash the following items in your appliances only if they have been sold as dishwasher proof; saucepans with wooden handles, plastic articles and fine decorated china.
- Do not wash silver cutlery and stainless steel cutlery together (a chemical reaction may occur).

Service and repair

- You should not attempt to repair the machine yourself. Repairs carried out by inexperienced or unqualified persons may cause unjury and/or more serious faults to the machine.
- This product should be serviced by an authorised Electrolux Service Centre only, and only genuine spare parts should be used.

General safety

- It is dangerous to modify the specifications of this appliance in any way.
- This appliance is designed to be operated by adults. Children should not be allowed to touch the controls or play with the product.
- Never open the door while the appliance is in operation. Always turn off the appliance before opening the door.
- Close the door of the appliance as soon as loading/unloading has been completed (an open door may be a hazard).

Read this first!

Congratulations on your choice of dishwasher! We hope that you will have many years of trouble-free use from it. You can make your own contribution towards this by reading through the whole instruction book carefully before using the machine. This will help you to avoid making mistakes and will also provide you with some tips on functions and features which will enable you to make better use of your dishwasher.

The machine has been designed and built according to the latest research and development, to produce the best possible results with the lowest possible consumption of water, energy and detergent.

INTENDED FOR DOMESTIC USE ONLY

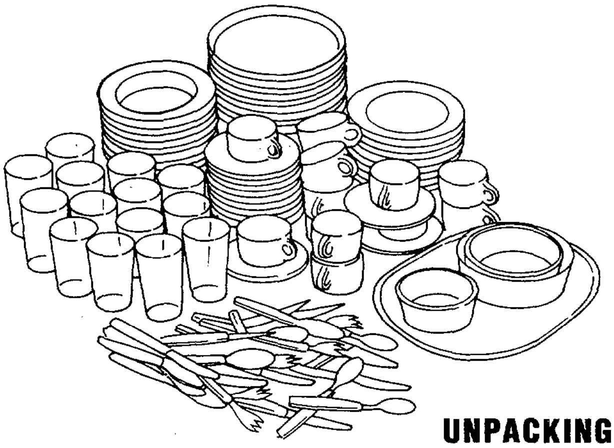

The responsibility of the manufacturer and supplier only covers normal domestic use for the washing of household articles. Any other use of the machine is your own responsibility and at your own risk.

UNPACKING YOUR MACHINE

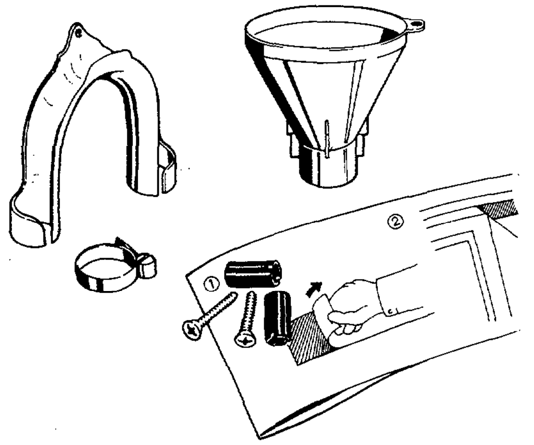

Check the machine for damage. Any damage caused in transit must be reported within seven days to those responsible for carriage of the machine.

Check also that you have received the correct accessories. All machines should be supplied with a bracket for the outlet hose and a funnel for adding salt (the section headed "Using the machine for the first time" describes how to do this).

If your machine is intended to be built in (supplied without side panels and top), there should be a plastic bag containing a hose clip and two screws, with the appropriate plastic fixing plugs to secure the machine to the kitchen units. There should also be an anti-condensation device to be attached beneath the front edge of the worktop.

Installation

CONTENTS: *Who should install the machine? Level the machine Fitting into kitchen units. Connection of water inlet, water outlet and electricity. Setting the childproof door lock.*

WHO SHOULD INSTALL THE MACHINE?

Electrical and plumbing work should be carried out by a qualified person or persons. If you carry out any part of the installation work yourself, you must find out what regulations are applicable, and then comply with them. Incorrect installation can lead to injury or damage to property. If installation has not been carried out correctly, you run the risk of restricting our undertaking to meet any claims fully.

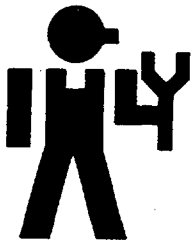

LEVEL THE MACHINE

Place the machine in its intended position and check that it is level both front to back and side to side.

N.B. This is very important. If the dishwasher is not level, the wrong amount of water may be taken into the machine. In addition the upper rack may be awkward to pull out and the door difficult to close.

If necessary, adjust the level of the machine by turning the threaded feet. The next step is to connect the water outlet hose, water inlet hose and electricity (see below).

There is a very small risk that a dishwasher may tip forward if a heavy weight is placed on the open door. Never let children play on or in the machine!

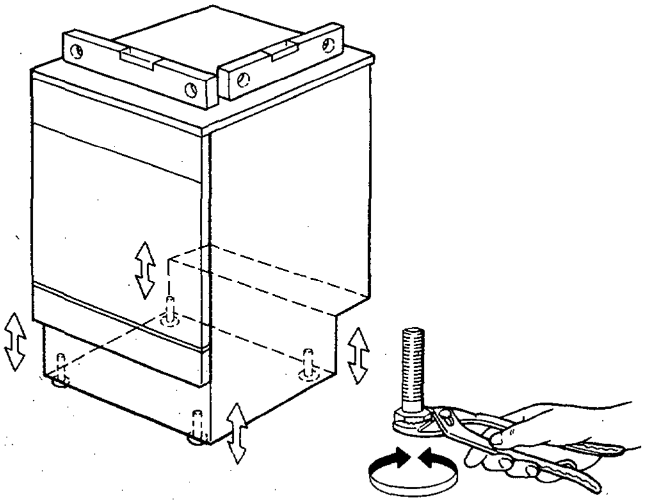

FITTING INTO KITCHEN UNITS

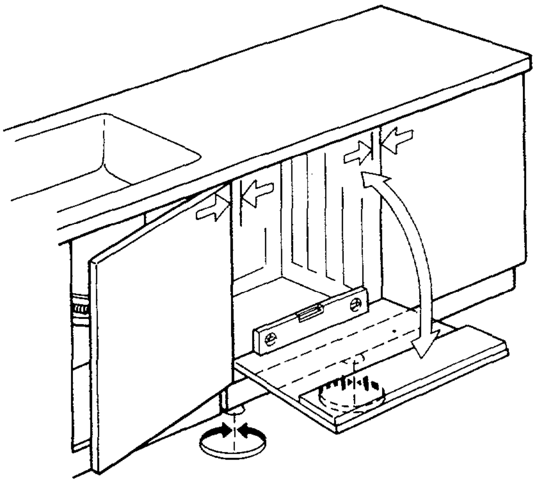

Before positioning the machine, you can set the feet in approximately the right position at the front by extending them downwards slightly.

Pass the hoses and mains cable through the hole at the very back of the kitchen unit where appropriate. Pull them in gradually, whilst guiding the machine carefully in. Avoid lifting and pulling the control panel. Check that the hoses have not kinked.

CONNECTING THE OUTLET HOSE

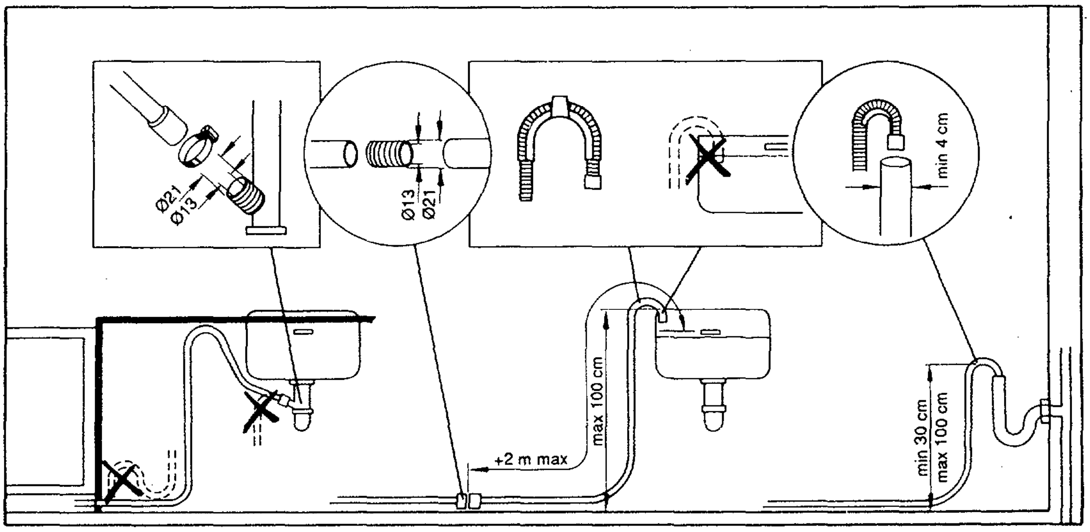

- The hose must not be cut but may be extended to a maximum of 4 m. If you do this, remember that the minimum permissible internal diameter is 13 mm.

You may choose any of the following methods to discharge the water from the machine:

1. Directly into the sink – by hanging the hooked end of the hose over the edge of the sink. The top of the hook should not be higher than 1,000 mm (40 in) above the floor. Please note that if you choose this method, the sink should not be used while the machine is operating as the water being discharged is extremely hot.

2. Via a water-break to a fixed drain outlet. The water-break is essential and should be positioned at least 500 mm (20 in) above floor level to prevent water draining away from the machine at times other than intended. The maximum permissible height from the floor to the top of the drain hose is 1,000 mm (40 in). The drain stand pipe should have a minimum internal diameter of 38 mm (1.5 in). A trap should be provided between the standpipe and the drain to prevent odours from escaping into the work area.

3. Into a Universal waste trap which replaces the sink trap.

CONNECTING THE INLET HOSE

Since your machine is provided with a water-softener filter, we recommend cold fill. (The times and consumption values in the programme selection guide are calculated for an inlet temperature of 15°C).

If you choose to connect your machine to hot water instead, please note that the temperature of the incoming water should not exceed 70°C. If it does, a thermostatically controlled mixer should be installed ahead of the inlet.

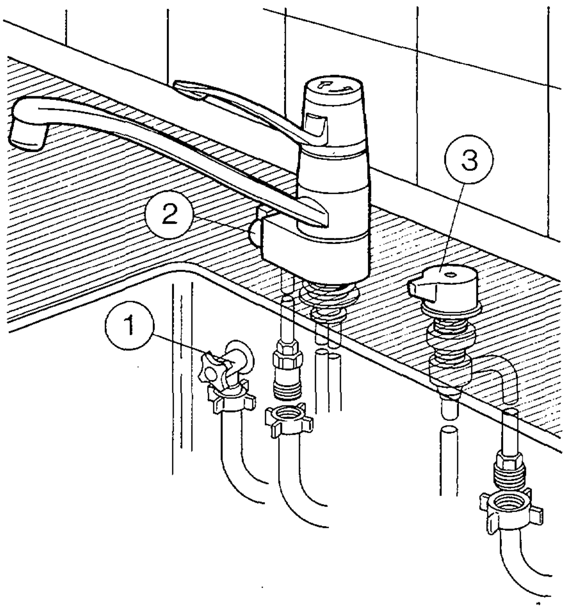

CONNECT THE POWER SUPPLY

The machine is connected to 240V supply by a plug in an earthed socket. The lead is 1.5 m in length.

N.B. Before working on the machine, it must be isolated by pulling the plug out of the socket. **For more details about electrical connection, see "Technical data".**

Whenever the machine is isolated, the water should also be turned off, since the safety system requires electricity to function fully.

When the waste water outlet, water inlet and power supply have been connected, you can turn on the water supply and check that all the connections are watertight.

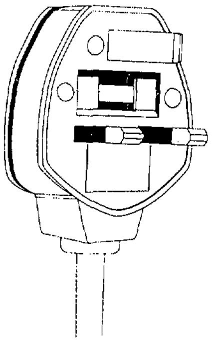

SETTING THE CHILDPROOF DOOR LOCK

There is a red screw at the upper edge of the door. Set this to the position shown in the picture if you want the safety catch on the door to operate. The handle will then have to be pushed to the right and up before the door will open.

Installation has now been completed.

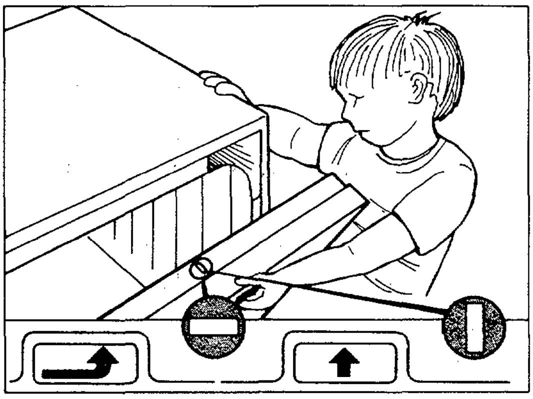

Using the machine for the first time

CONTENTS: *Before starting. Filling with salt and regulating amount dispensed. What you can wash. How to load the machine. Filling the detergent dispenser. Filling the rinse-aid dispenser. Operating the machine.*

BEFORE STARTING

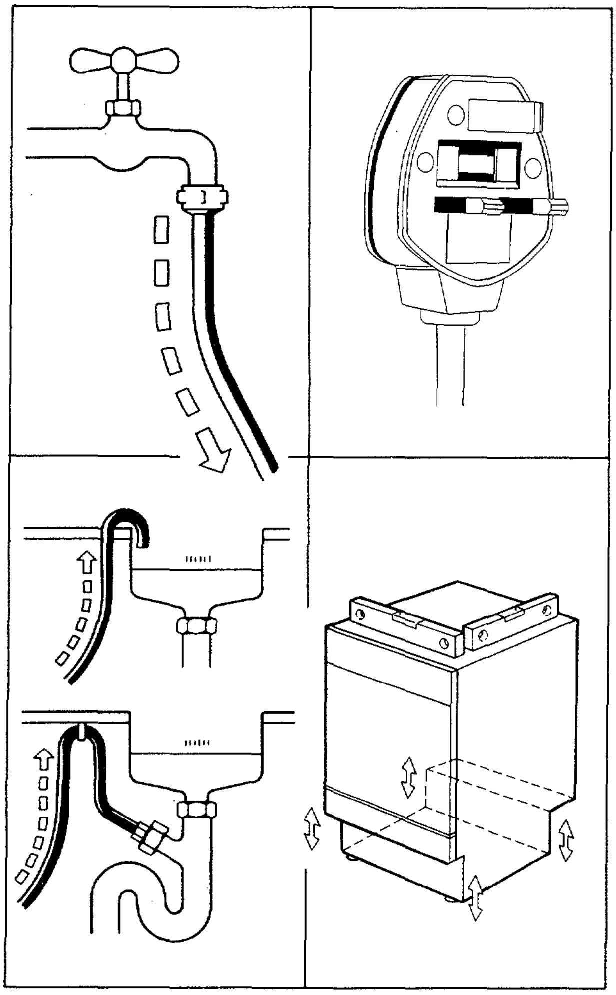

If you have not installed the machine yourself exactly as described in the instructions in the previous section, you should first check that

- The water inlet and the waste outlet hoses are correctly connected (see instructions)

- The power lead is connected to an earthed socket (if you do not have a plug on your machine the power lead must be permanently connected by a qualified electrician).

- The machine is level both front to back and side to side. If it is not level, the wrong amount of water may be taken into the machine, the upper rack may not run freely, and the door may be difficult to close properly.

FILLING WITH SALT

Your machine is fitted with a water softening filter. The softening process prevents limescale deposits forming in the machine and on your dishes.

Before using the machine you must fill the special container at the bottom of the machine with coarse salt available especially for dishwashers. Do not use table salt. The container holds 1.5 kg of salt, which is sufficient for 15-30 loads, depending on the amount dispensed (see below).

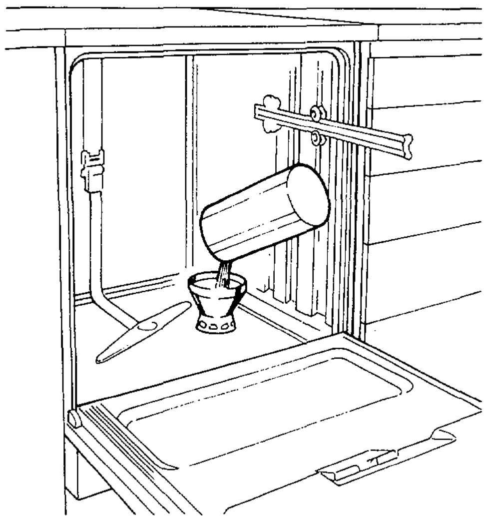

Unscrew the lid of the salt container (inside the machine, at the bottom to the right of centre, marked with the symbol shown here). Use the funnel supplied to fill the container first with ordinary water and then with coarse salt. Remove the funnel and wipe away any spilt salt. (Spilt salt which is not cleaned up is corrosive and can cause spots on the stainless steel surfaces of the machine.) Screw the lid back on and run a rinse programme if you are not going to wash straight away.

NEVER OPERATE THE MACHINE WITH AN EMPTY SALT CONTAINER

If you do, there is a serious risk of damaging the water-softening function. (If the damage is slight, the function can be partly restored by running the short programme 4-5 times after refilling with salt.)

A small light on the front panel indicates when the salt needs topping up.

AMOUNT OF SALT DISPENSED

Water-softening requires varying amounts of salt depending the hardness of the water. The amount of salt dispensed is set using the small red selector screw at the top right-hand corner of the machine. The selector can be set in two positions (use a screwdriver or similar tool):

* Position 1 for water softer than 20 °dH.

* Position 2 for water of 20 °dH or more.

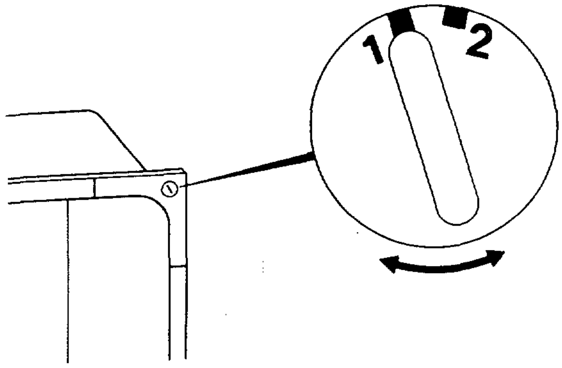

If you do not know how hard your water is, you can start with position 1 and then move to position 2 if limescale deposits appear in the machine. If lime deposits do develop, they can be removed by filling the detergent dispenser with approx. 60 grams of citric acid and running a long programme with the machine empty.

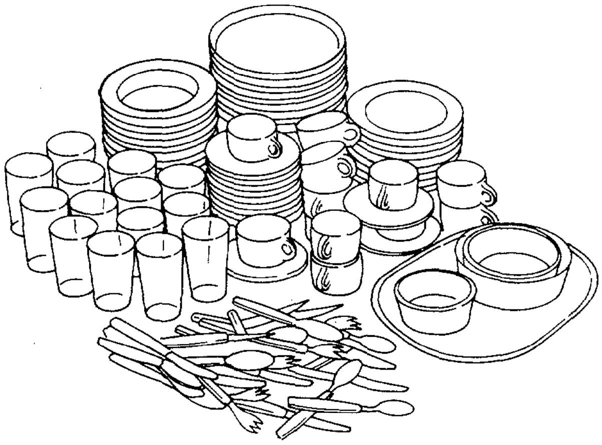

Many items come with instructions indicating whether they are dishwasher-proof. However, the following comments may be useful:

CHINA: In some cases the decoration may be unprotected, on the outside of the glaze, and colours may fade if they are washed repeatedly by machine. Be aware of this when buying new china.

GLASS: Problems rarely occur. You should make sure there is rinse-aid in the machine and that the correct amount is dispensed (see below). CRYSTAL should not be washed at temperatures exceeding 55°C.

STAINLESS STEEL: Very tolerant, but direct contact with detergent can cause it to spot. If you use detergent for the pre-wash, you should therefore not place the cutlery basket directly in front of the detergent dispenser. (Pre-wash detergent is placed in the recess on the flap of the detergent dispenser.)

ALUMINIUM: Coloured or anodised aluminium is bleached by dishwasher detergent. The shiny surface loses its gloss and becomes slightly blotchy.

SILVER: You can wash silver items in the machine but take care to ensure that the silver does not come into contact with other metals. Do not mix silver and stainless steel.

PLASTICS: Plastic parts should not be positioned directly above the heating coils (on the left at the very bottom of the machine). Avoid using the heated drying function. Items or parts made of certain types of plastic may distort.

WOOD: Items which consist wholly or partly of wood (e.g. handles) should not be washed in a dishwasher as they may crack or dry out.

OTHER ITEMS: Cutlery with glued or cemented handles may be affected by hot water so that the handle works loose. Bakelite pan handles may crack or work loose. Some laminated materials are also sensitive to high temperatures.

N.B. Do not wash sandy objects such as flower-pots. The sand can cause problems in the machine.

First scrape off large remnants of food. You do not need to rinse the dishes beforehand, but remove all hard objects (see also note on sand above).

The UPPER RACK is used for cups, glassware, small dishes and plates, bowls, knives and other long objects which are not suitable for placing in the cutlery basket (excessively long objects in the cutlery basket may obstruct the upper spray arm). Place cups and glasses upside down, preferably at an angle so that the water can run off. The upper rack also contains a retractable cup shelf.

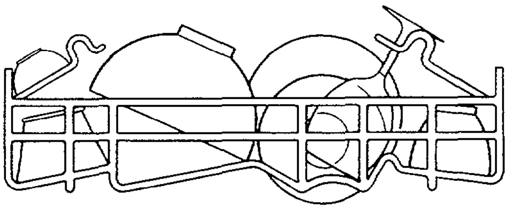

The LOWER RACK is intended for all heavier items such as plates, large dishes and bowls, saucepans, casserole dishes etc, but it is sufficiently close-meshed for you to be able to place cups, glassware etc. if you have a large number of items of this type. You can make room for very large objects by completely removing the upper rack. Further details are contained in the section headed "Useful tips".

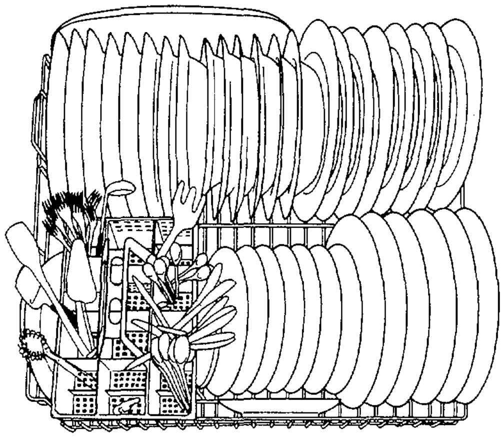

The CUTLERY BASKET can be moved sideways, giving you several options for placing large serving dishes and similar items in the lower rack. If you wish to, you can lift the cutlery basket out for filling and emptying. Place the cutlery with the handles pointing down, provided they are not so narrow and pointed that they can protrude through the bottom and prevent the lower spray arm from rotating freely. Never place sharp knives with the tip pointing up. Also make sure that longer objects do not obstruct the upper spray arm. There are different height levels in the basket to accommodate cutlery of different lengths. Spread the cutlery out as much as possible, so that the water reaches it properly. Make sure in particular that spoons and forks do not nestle together.

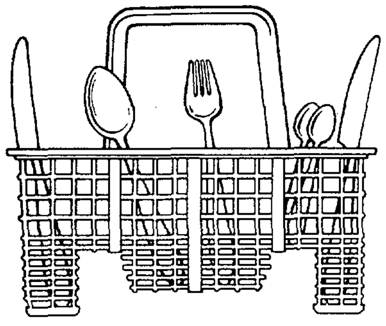

FILLING THE DETERGENT DISPENSER

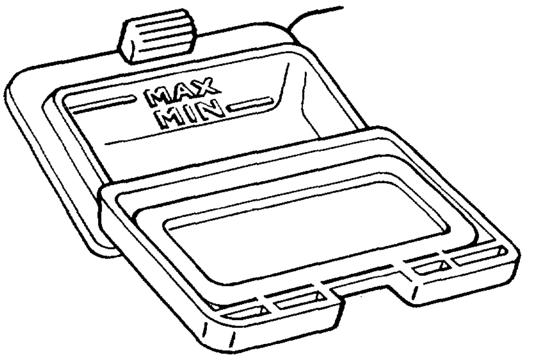

The detergent dispenser is on the inside of the door and is graduated to indicate the different amounts to be dispensed. Do not use ordinary washing-up liquid. Use only good quality dishwasher powder, otherwise there is a risk of excessive foaming and machine breakdowns.

Follow the dosage instructions on the packet. Do not forget to close the dispenser; it opens automatically while the programme is running. Pre-wash detergent is not generally needed but, if you have particularly heavily soiled items to wash, you can place a small amount in the recess on the flap of the detergent dispenser.

Follow the detergent manufacturer's dosage recommendations.

DISHWASHER DETERGENT SHOULD BE HANDLED WITH CARE

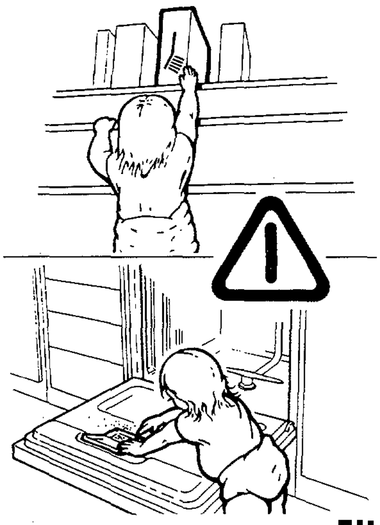

⚠ If someone swallows dishwasher detergent, make him or her drink several glasses of milk or water immediately. Do not induce vomiting. Seek medical advice.

If someone gets dishwasher detergent in their eyes, bathe immediately in plenty of water. Seek medical advice.

Make sure that children never come into contact with the dishwasher detergent. Keep it in a safe place, wipe away any spillage at once and never leave the door open with detergent in the machine. The door lock can also be set in the safety position; to open the door the handle must be pushed to the right and up. The section headed "Installation" describes how to set the childproof lock.

FILLING THE RINSE-AID DISPENSER

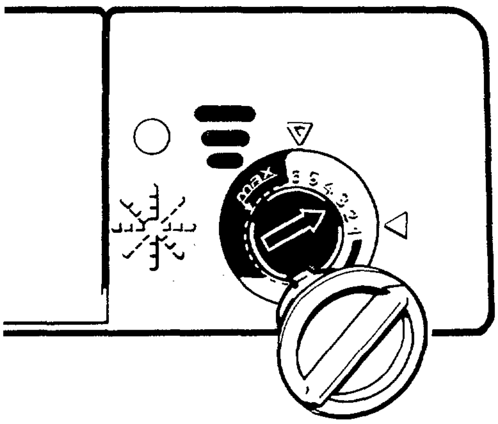

Rinse-aid results in cleaner items and faster drying because the water runs off more quickly. If you use the machine without rinse-aid, the items washed may feel rough.

The rinse-aid dispenser is on the inside of the door to the right of the detergent dispenser. It holds approximately 110 ml, which is sufficient for 16-40 loads depending on the dosage. The appropriate dosage depends in turn on the hardness of the water. The amount dispensed is set by turning the dial on the inside of the filling hole. Since your machine has a water-softener, you can select a low setting. If an excessive amount of rinse-aid is dispensed, streaks may appear on the items washed. If the items washed feel rough, this may be a sign that the salt dosage is too low and you should use a higher setting. (See section on salt dosage.)

FILLING THE RINSE-AID DISPENSER

When the "window" to the left of the filler hole becomes colourless, the rinse-aid needs topping up. Keep filling until the rinse-aid is visible in the dispenser.

Carefully wipe away any spills to avoid excessive foaming. If excessive foaming does occur, you can clean foam away from the machine by pouring a tablespoonful of cooking oil into the machine and running a short programme without detergent.

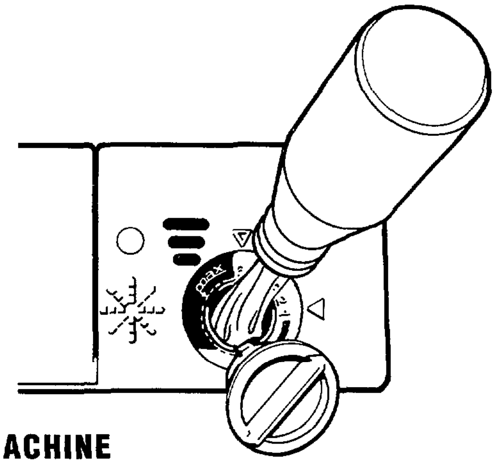

OPERATING THE MACHINE

When you have loaded the machine and filled it with detergent and rinse-aid, you are ready to start.

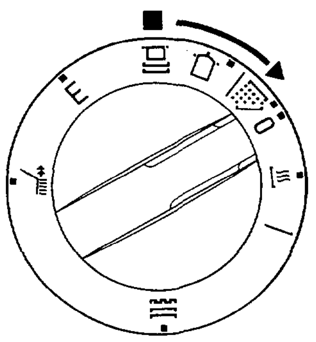

Start by closing the door and pressing the on/off switch at the far left-hand side of the panel (if it is not already in the "0" position) to turn the machine off.

Your machine has several programmes and possible combinations to match different needs on different occasions. They are all presented together in the next section. But the first time you use the machine, use the **normal programme** ( ). You can find this by turning the programme selector dial on the right-hand side of the panel.

Then press the on/off switch to position "1" to turn the machine on and the program will start. All you then have to do is wait to take out your clean dishes. The time depends to a great extent on the temperature of the incoming water and the washing temperature you have selected. There is more information about this in the next section.

IMPORTANT

With one exception, we recommend that you keep the on/off switch on all the time; all the parts of the machine's PermaSafe system will then function. You can read about this in the section headed "Safety". The one exception is when you select your programme. If the on/off switch is on, the machine will start as soon as you turn the programme selector dial, and the detergent dispenser may then open too early. To avoid this, switch the machine off while you select the programme.

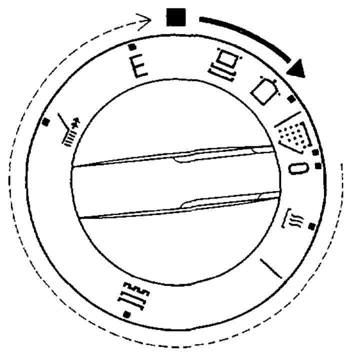

N.B. The programme selector dial may only be turned clockwise. You must never attempt to force the programme selector dial anticlockwise - if you do, it will break.

Programme selection guide

DISHWASHER ESF 640

DISHWASHER	Prewash/ Rinse (° C)	Wash (° C)	Rinse (° C)	Heated drying	Electricity cons*. (kWh)	Water cons*. (l)	Time* (min)
Rinse and hold Partial load, to be washed later.	(*)	—	—	no	0,02	5	7
Long Heavily soiled items, casserole dishes etc.	55 55	65 65	65 55	yes no	2,05 1.60	21 21	78 60
Normal Normally soiled items	(*) (*) (*)	65 65 55	65 55 55	yes no no	1.83 1.39 1.18	21 21 21	74 55 51
Economy Lightly soiled items	— — —	65 65 55	65 55 55	yes no no	1.80 1.36 1.15	16 16 16	66 48 43
Quick Small quantity of lightly soiled items	—	55	55	no	1.09	15.5	37
Plate warming	—	—	65	yes	1.11	6.5	39

* Consumption figures apply to 12 IEC international standard place settings and cold-fill (15°C) machines, and are approximate only.

(*)Rinse at incoming water temperature.

SELECTING THE APPROPRIATE PROGRAMME

A brief description of the basic programmes follows:

RINSE AND HOLD can be used when you load the machine little by little and in preparation for a "proper" wash programme later. The rinse and hold programme is economical on water and uses very little energy since no heating takes place. Do not use detergent.

LONG is used for casserole dishes, saucepans and other large or heavily soiled items. Recommended washing temperature 65°C. Pre-wash at around 55°C. If required, you can put a little pre-wash detergent in the recess on the detergent dispenser flap.

NORMAL, as the name suggests, is the most general programme and is more than sufficient for normally soiled articles. Replaces pre-wash with an unheated rinse cycle.

E ECONOMY is used for lightly soiled articles which do not require pre-rinsing. Recommended wash temperature 55°C. As the table shows, it saves electricity and water, and also results in a shorter washing time.

55° QUICK is used when you only have a small quantity of items to wash which are not heavily soiled. The short main wash automatically takes place at 55°C, whatever temperature is selected by the selection button.

PLATE WARMING is not a wash programme, but an additional feature for those who wish to serve food on hot plates. It rinses at 65°C and dries using additional heat.

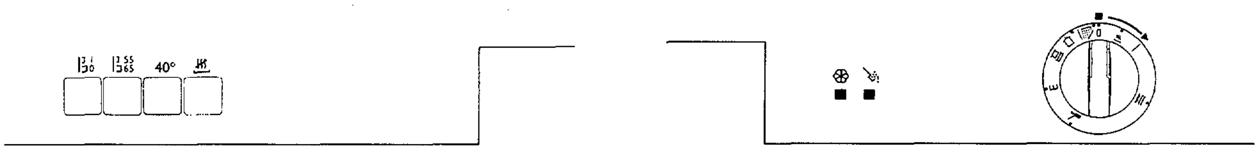

ECO SELECT

You also have the option of selecting the temperature and drying method you want for the Long, Normal and Economy programmes. Together they give you a very wide range of possible combinations.

HEATED DRYING produces drier dishes, but also consumes more energy. When this feature is selected the final rinse takes place at 65°C and the air in the machine is then heated by the heating coils. The final rinse then takes place at 55°C. You can cancel heated drying by depressing the button. When the machine has finished washing, open the door slightly and the dishes will be dry after about half an hour .

55° 65° TEMPERATURE SELECTION allows you to choose between 55°C (button depressed) or 65°C (button not depressed) for the main wash. If the items to be washed are not too heavily soiled, select 55°C, and you will save both energy and time. You do not need to depress the button if you select programmes which automatically run at preet temperatures, i.e. the Rinse and Hold and Quick programmes.

40° Under the same conditions you may also chose the 40°-button if you have lightly soiled or sensitive items to wash like crystal glasses etc.

For your normal washing requirements we recommend you use the normal programme at 55° without the additional heated drying feature.

Useful tips

Contents: *Height-adjustable upper rack. Washing particularly large items. Some comments on economy and the environment.*

The following sections describe some functions and features which will enable you to get more benefit from your machine:

HEIGHT-ADJUSTABLE UPPER RACK

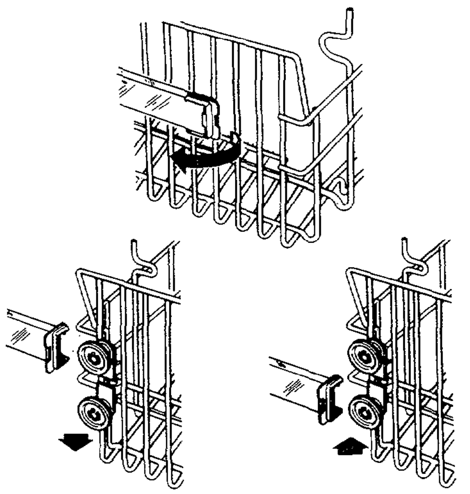

You can position the upper rack at two different levels, depending on the height of the items you wish to place in the upper and lower racks.

To change the level, pull the upper rack out slightly so that you can reach the plastic stops at the ends of the guide rails in which the wheels of the upper rack run. Fold back these plastic stops as shown in the picture. You can now pull the upper rack out and raise or lower it to the second pair of wheels.

WASHING PARTICULARLY LARGE ITEMS

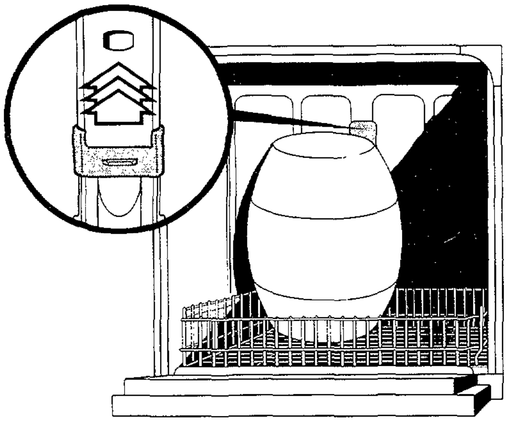

If you need to wash particularly large pots and pans or other very bulky items which otherwise would not fit, you can remove the upper rack completely.

Remove the upper rack as described in the previous section. Then close the water outlet of the upper spray arm (the spray arm comes out with the upper rack) by pushing the sliding valve up (see picture). This increases the pressure in the lower spray tube.

When you re-install the upper rack, do not forget to re-open the sliding valve.

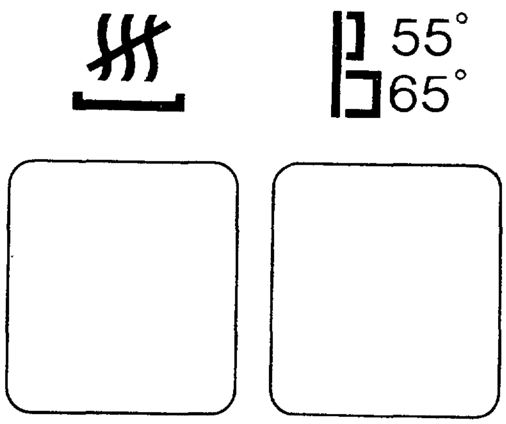

You have purchased a very energy-efficient machine, which is economical with energy and water. It uses only 21 litres of water for the normal and long programmes, and even less for shorter programmes.You can also make further energy-savings by your choice of wash temperature.

55° 65° One way is through temperature selection. In the vast majority of cases 55°C is quite sufficient to give perfect washing results. If you reduce the temperature from 65°C to 55°C (by pressing the 55°C button), you save approximately 0.2 kWh per normal wash. This adds up to quite a large amount in the long run. However, you should ensure that heavily soiled items receive the necessary 65° wash.

Another way to economise is through drying. If you cancel the heated drying function by pressing the appropriate button, you can make another saving of approx. 0.4 kWh per normal wash. You simply leave the door ajar when the machine has finished washing, and the dishes will still dry (in around half an hour). Just remember to place cups and glasses with curved bases at a slight angle so that the water can run off

Care and maintenance

CONTENTS: *Cleaning the outside of the machine. Cleaning the spray arms. Cleaning the coarse filter and fine filter. Measures to take where there is a risk of freezing.*

This section describes how best to look after your machine so that you get the greatest possible benefit from it with the least possible worries for the longest possible time:

CLEANING THE OUTSIDE OF THE MACHINE

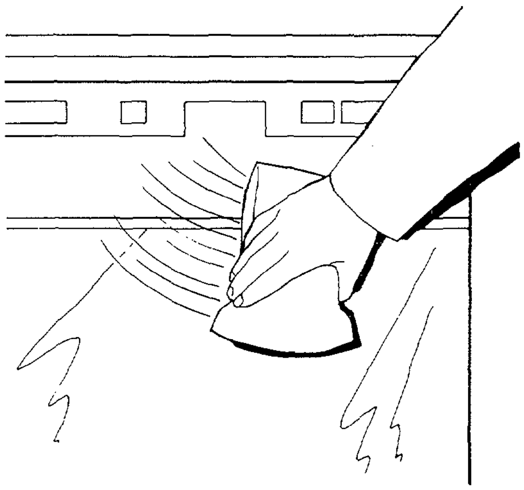

Wipe the machine clean with a damp cloth and a non-abrasive liquid cleaning agent. Never rinse down the machine.

The machine cleans itself inside every time you wash, but there are some parts which may need special attention now and again to ensure the best possible washing results.

CLEANING THE SPRAY ARMS

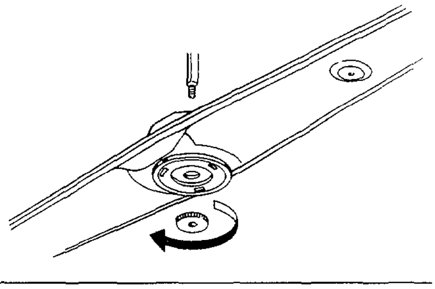

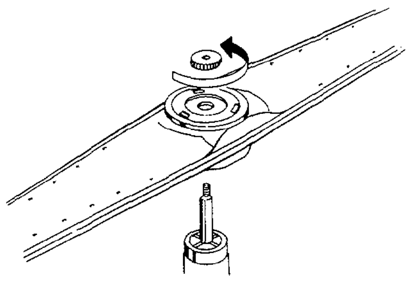

The spray arms rarely need cleaning, but if you suspect that dirt has got into them, you should rinse them under running water.

Remove them by undoing the round nut in the centre. *N.B. Undo the nut for the upper spray arm CLOCKWISE, i.e. the opposite way to usual.*

If you are unsure which is the upper or lower spray arm when you come to re-fit them, look for the downward facing nozzle which is on the upper spray arm.

CLEANING THE COARSE FILTER AND FINE FILTER

It is best to check the COARSE FILTER in the middle of the fine filter after each wash. If there is dirt in it, turn it anticlockwise and lift it out. Empty out the dirt and rinse clean. When replacing the coarse filter, turn it until it snaps into position.

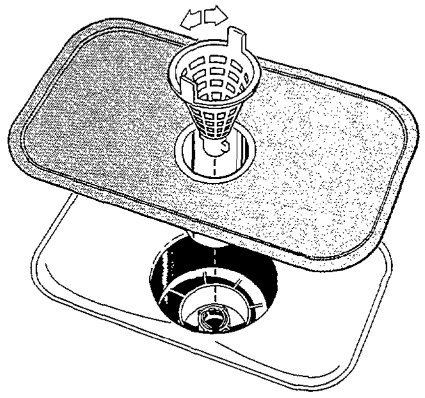

The FINE FILTER is self-cleaning, i.e. it rinses itself clean during the course of the washing process. However, the underside may sometimes need cleaning. When the coarse filter has been removed, it is easy to pull the fine filter out. Brush it clean under running water. Handle with care.

MEASURES TO TAKE WHERE THERE IS A RISK OF FREEZING

If your machine is in a place where it may be exposed to frost or left unused for long periods, it should be protected as follows:

Turn off the water. Disconnect and drain the inlet and outlet hoses. Finally empty the inlet valve by setting a programme and running the machine for a few seconds.

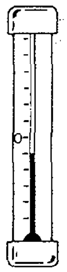

Safety

SAFETY: *The PermaSafe system. Child safety. Setting of door safety lock. Importance of securing the machine in position with screws. Heat warning. Turning off water and electricity.*

Your dishwasher is a convenient and useful appliance. But it also contains several dangers – e.g. hot water and powerful detergent – and should therefore be treated with respect and caution. Our approach to safety includes a comprehensive form of protection against water leakage:

PERMASAFE WATER SAFETY SYSTEM

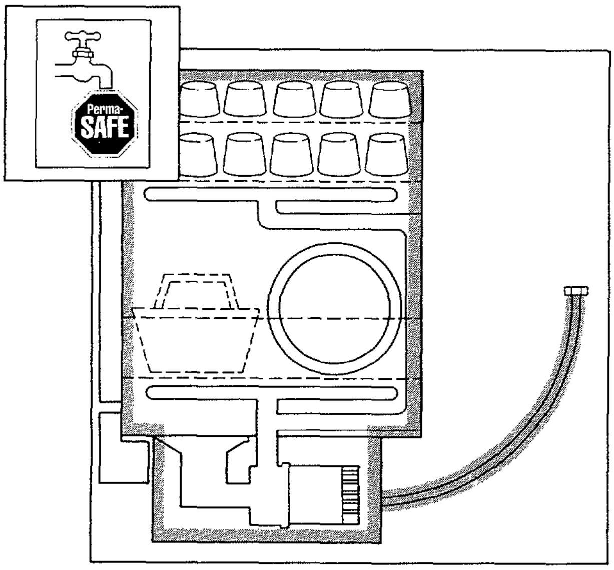

The PermaSafe system contains several parts acting in conjunction with each other:

SAFETY ZONE. All the water is within the all-embracing safety zone, which consists of the stainless steel cabinet, the electrogalvanised steel base plate and the flexible PEX connection pipe.

PEX CONNECTION PIPE. This is so strong and resistant that it can be regarded as part of the permanent plumbing system. It retains its useful properties for at least 20 years. N.B. The PEX pipe is supplied in one piece with no joints, and must not be cut or joined on installation.

LEAKAGE SENSOR. As additional protection there is a moisture sensor at the very bottom on the baseplate. It is a dry, compressed sponge which expands if it becomes damp, operating a switch via a spring-loaded arm. This closes the inlet valve and causes the drain pump to empty the machine. All the indicator lights on the control panel then go out. The drain pump continues operating until the main switch is turned off.

OVERFILL PROTECTION. A level sensor inside the machine ensures that the correct amount of water is let in. If the level guard detects that the water level is too high, it activates the same procedure as described above - the inlet valve closes and the machine is drained.

SELF-CLEANING PUMP. The drain pump automatically changes direction if it becomes blocked. Both directions produce the same pumping effect, i.e. the machine empties.

CHILD SAFETY

Always keep dishwasher detergent out of the reach of children. Keep it in a safe place, wipe away any spillage immediately and never leave the door open with detergent in the machine. If you have small children in the house - even if only temporarily - set the door lock to the childproof position (see below).

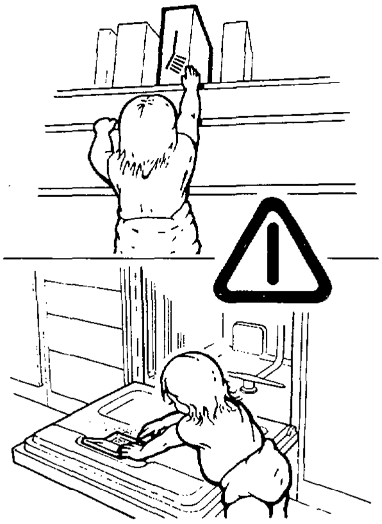

⚠ If someone swallows dishwashear detergent he or she should immediately drink several glasses of milk or water. Do not induce vomiting. Seek medical advice.

If someone gets dishwasher detergent in their eyes, bathe immediately in plenty of water. Seek medical advice.

SETTING DOOR SAFETY LOCK

There is a red screw at the upper edge of the door. Set this to the position shown in the picture if you want the safety catch on the door to operate. The handle will then have to be pushed to the right and up before the door will open. Simple for adults but not so easy for children.

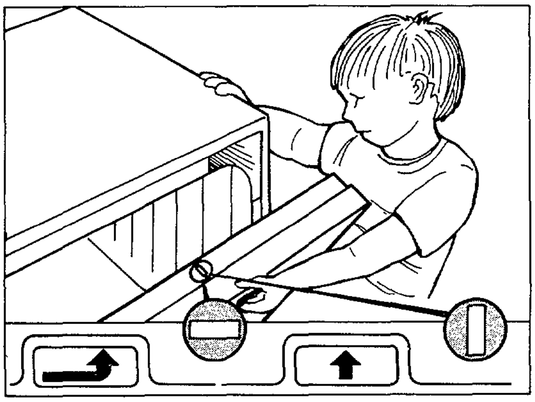

HEAT WARNING

A safety switch in the door lock stops the machine if you open the door while a programme is in progress. If you do interrupt a programme, remember that the fittings and the items being washed may be hot, particularly in a 65°C programme.

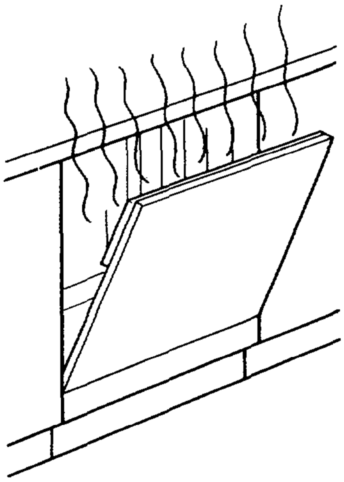

If you have to open the door while a programme is in progress, proceed as follows:
Turn off the main switch. Open the door. When you close the door again, wait ten seconds before pressing the main switch.

⚠ If you have an open outlet - e.g. the hose discharging into a sink - you should also take care when the machine is emptying the hot waste water.

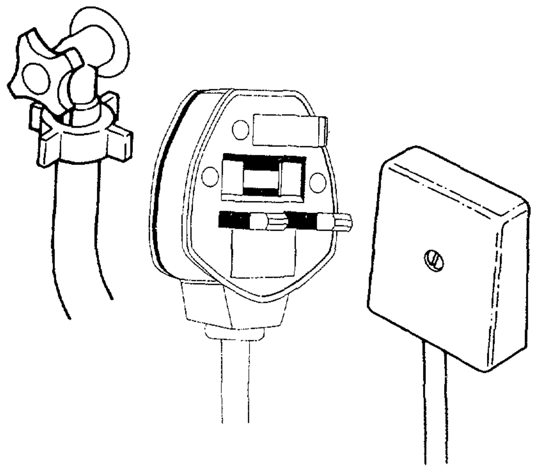

There can be a risk of leakage with all types of water connection, regardless of how comprehensive the safety systems are.

The main switch should be turned on when the water is connected; all parts of the PermaSafe system are then ready for action.

Turn off the water when the machine is not going to be used for a prolonged period.

N.B. The plug must be pulled out before any work is undertaken on the machine. If the machine is wired-in to its power supply, remove the relevant fuses or switch off the circuit breaker at the fuse box instead.

Simple faults

CONTENTS: *Things you can check yourself if the machine fails to start, does not fill with water, does not empty, does not wash items properly or floods in spite of everything.*

Below are a few tips on things you can check before calling out a service engineer. Many problems are simple to deal with yourself.

IF THE MACHINE FAILS TO START ...

- Has the previous programme finished?
- Is the on/off button pressed in? If it is, but no lights come on, check the plug and fuses.
- Is the door closed properly?
- Have you selected a programme?
- Has the leakage protection device been activated? (See section headed "Safety".) If so, you will hear a soft buzz from the drain pump, and no lights will be on. You should call a service engineer.

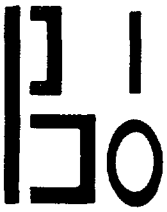

IF THE MACHINE DOES NOT FILL WITH WATER ...

- Is the water tap/stopcock on?
- Has the inlet hose become trapped? (unlikely, but not impossible)
- Has the previous programme finished?

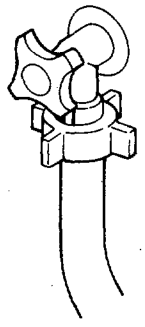

IF THE MACHINE DOES NOT EMPTY ...

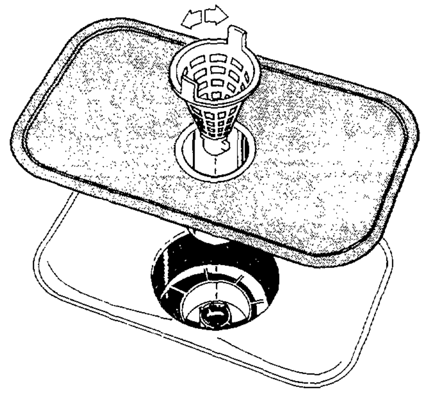

• Are the filters blocked?

• Is the end of the outlet hose blocked?

• Is there a kink in the outlet hose? When moving the machine into position it is important to make sure that the hoses are not trapped or forced together so that they kink.

IF THE LOAD HAS NOT BEEN WASHED PROPERLY ...

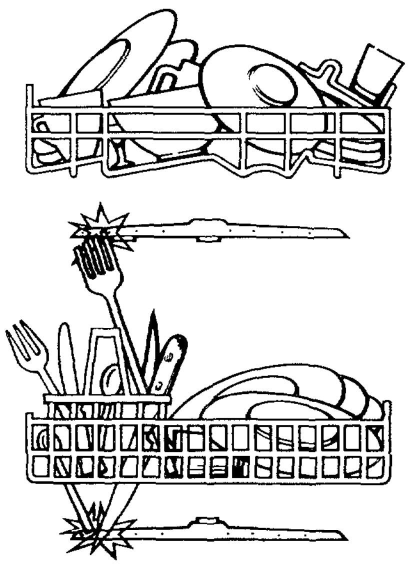

• Is the machine level both front to back and side to side?

• Are the spray arms blocked, or prevented from rotating freely?

• Is the upper spray arm valve open? (Look behind the upper rack).

• Are the filters clean?

• Are the items being washed placed too close together, or facing the wrong way? Cups, glassware, dishes and so on must be placed upside-down.

• Have you used too little or too much detergent? Follow the instructions on the packet. This also applies to the rinse-aid.

• Are there limescale deposits on the items which have been washed? If so, put approx. 60 grams of citric acid into the detergent dispenser and run a long programme without detergent.

IF THE MACHINE FLOODS (IN SPITE OF EVERYTHING) ...

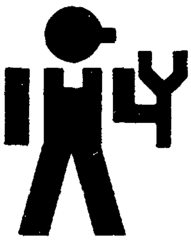

Turn off the water immediately

• Are the joints and connections watertight?

If you cannot locate the fault - call a service engineer.

N.B. Never undertake any work on the machine yourself beyond that described in these user instructions. If you do, it could lead to injury or further machine malfunctions.

Service and spare parts

CONTENTS: *Who to contact if you need a service engineer or spare parts.*

WHO TO CONTACT IF YOU NEED A SERVICE ENGINEER OR SPARE PARTS

Contact the shop where you bought the machine, or contact Electrolux Service direct. A list of telephone numbers is printed at the end of this book.

In either case it is helpful to have the information given on the service plate on the top of the door available. Please make a note of this in the spaces below now, so that they will be readily to hand:

Model ____________________

Product number ____________________

Serial number ____________________

It is also useful to note down the date of purchase...

(Keep your receipt!) __________

Technical data

Voltage:	240 V, single-phase +earth
Fuse rating:	13 A
Type of current:	CA, 50 Hz
Power:	Element power 2100 W
	Total 2300 W
Water pressure:	80-1000 kPa (0.8-10 kp/cm2)
Mains connection:	1.5 m lead with plug.
Connection:	Cold-fill (approx. 15°C).
Water hardness:	Above 10° dH
Capacity:	12 IEC international standard place settings.

CONNECTING TO THE MAINS

Before you use your dishwasher, check that the voltage shown on the data plate conforms with your mains supply. The mains lead of the dishwasher is fitted with a non-rewireable moulded on 13 amp plug containing a 13 amp fuse. In the event of the fuse requiring replacement the fuse cover/carrier should be removed using a small screw-driver to lever it out. The old fuse should be replaced by a 13 amp approved BS1362 fuse and the fuse cover/carrier must be refitted before the plug is used again. If the fuse cover/carrier is lost, a replacement can be obtained from an electrical shop. The fuse cover/carrier must be of the same colour as that of the colour insert in the base of the plug. In no circumstances must the plug be used without a correct fuse cover/carrier fitted.

If the plug supplied on the mains lead is not suitable for the socket outlet in your home it should be cut off and disposed of safely or destroyed to avoid any possible shock hazard resulting from the plug being inserted into a 13 amp socket elsewhere in the house. A suitable replacement plug should be fitted (as in fig 1). If a 13 amp plug and socket are not used the ciruit supplying the dishwasher should contain a 15 amp fuse.

WARNING! THIS APPLIANCE MUST BE EARTHED AND PROTECTED BY A 13 AMP FUSE.

IMPORTANT! THE WIRES IN THE MAINS LEAD OF THIS APPLIANCE ARE COLOURED IN ACCORDANCE WITH THE FOLLOWING CODE:

GREEN- and-YELLOW : Earth

BLUE: Neutral

BROWN: Live

As the colours of the wires in the mains lead may not correspond with the coloured markings identifying the terminals in your plug proceed as follows.

Connect the GREEN-and-YELLOW coloured wire to the plug terminal marked letter "E" or earth symbol or coloured GREEN or GREEN-and-Yellow.

Connect the BROWN coloured wire to the plug terminal marked letter "L" or coloured RED.

Connect the BLUE coloured wire to the plug terminal marked letter "N" or coloured BLACK.

fig. 1

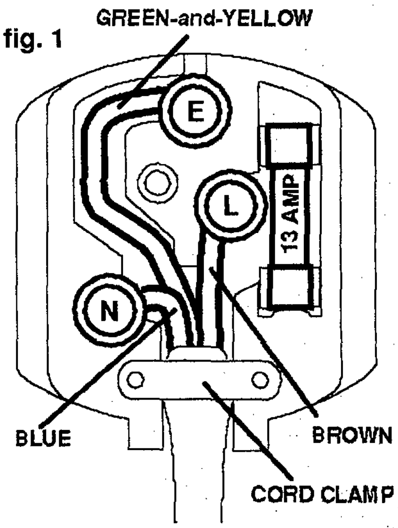

Care should be taken to ensure the machine does not stand on the electrical supply cable.